220ty

pe

Aluminium alloy

Louver Pergola

Modern multi-functional ecological sun room





Louver Pavilion

The flip board louver pavilion is a new type of outdoor leisure and entertainment facility, also known as an ecological sunroom;
Aluminum alloy pavilions have excellent functions such as sun shading, rain resistance, snow resistance, and durability. The structure is sturdy and durable, and the surface is coated with high-density powder, which is rust proof and non fading. It is maintenance free for 20 years;
The design of the top foldable panel distinguishes it from traditional glass sunrooms, eliminating the disadvantage of stuffiness and lack of ventilation. By controlling the flipping angle of the louvers, the pavilion can achieve air intake and lighting; The pavilion adopts a double-layer hidden drainage system, and rainwater is discharged from the top of the pavilion through an internal sink and pillars;
Moreover, aluminum alloy pavilions can be paired with doors and windows, windproof roller blinds, light strips, fan lights, heating season and other equipment to form a multifunctional ecological sunroom, allowing users to enjoy a comfortable outdoor life.



Close



Open

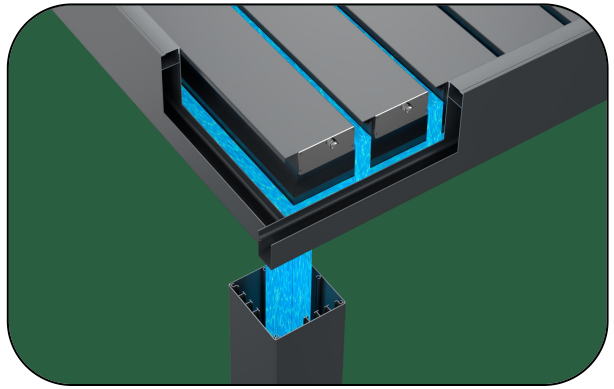

Drainage



Lighting

Product Advantages

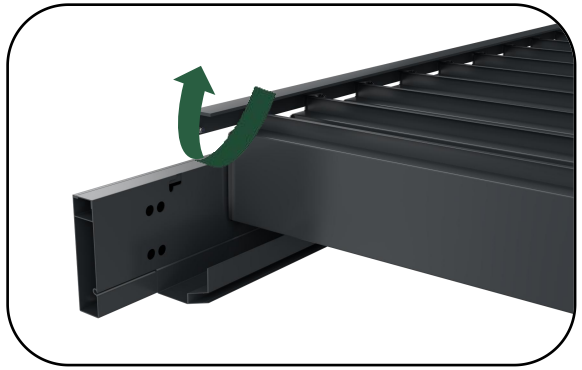

①Large opening angle

The opening and closing angle of the blades can reach 90 degrees, and the shading degree and air intake can be adjusted according to the needs.

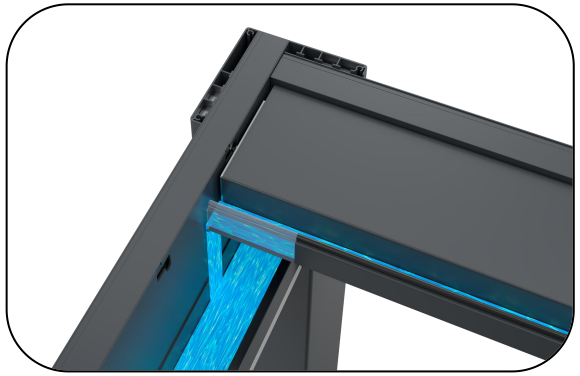

②Double layered blade with sink

The louver adopts a double-layer structure and is equipped with a water channel. Rainwater flows from the blade water channel into the inner water channel without dripping.

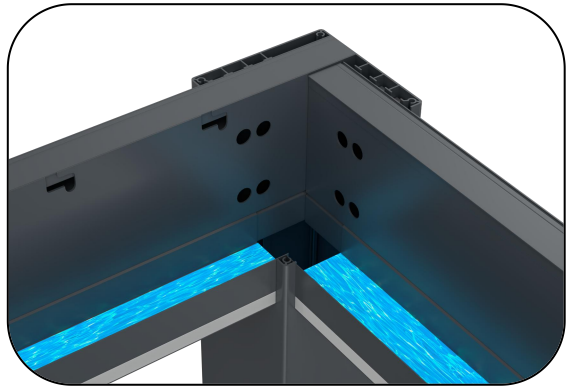

③Invisible drainage

The invisible drainage system allows rainwater to flow from the top of the louvers into the internal water tank, then into the columns, and finally discharged underground.

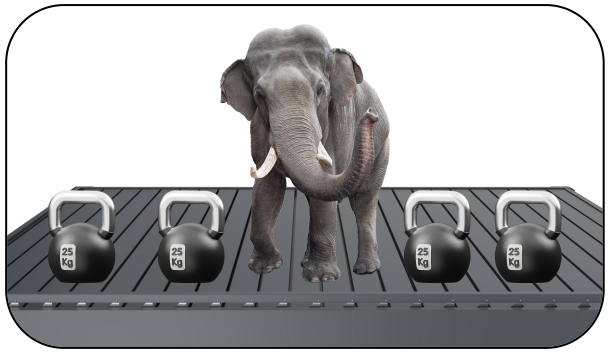

④ Load capacity of 110 kg

Columns/beams/blades are wider and thicker, and do not sway in strong winds. The anti snow pressure can reach 110kg/square meter.

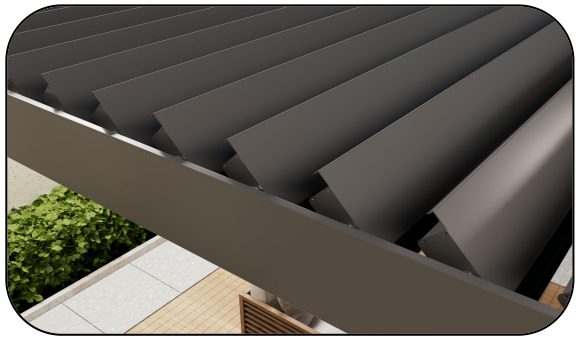

⑤Aluminum alloy&powder coating

Made of aluminum alloy, resistant to wind, corrosion, and deformation; High density powder coating on the surface, rust free, safe and environmentally friendly, with no fading for 20 years.

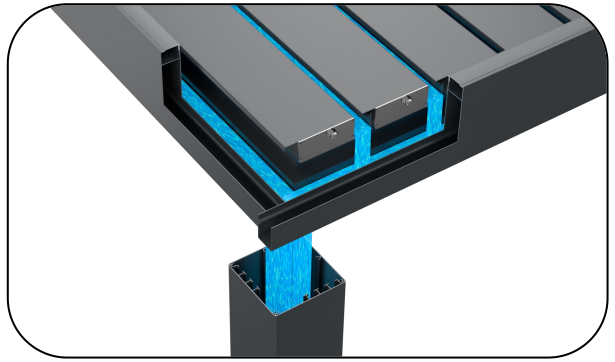

⑥Dual drainage system

It can effectively prevent rainwater from splashing around, and the top can withstand rainfall with a duration of 2 minutes and an intensity of up to 40-50 milliliters per second per square meter.

220type

Optional types: electric/manual
Maximum blade length: 5 meters

·220 type flip panel pavilion single set (four columns), maximum length of 6 meters x width of 5 meters

·The internal sink comes with lighting as standard



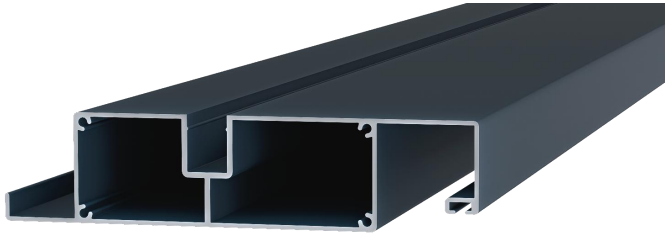

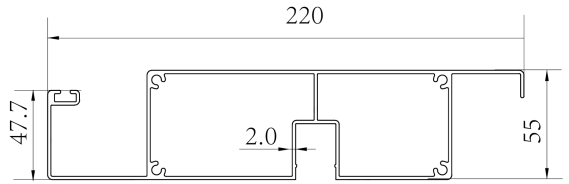

Louver size： 220x55x2.0mm

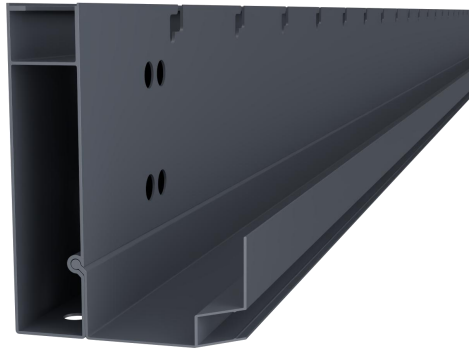

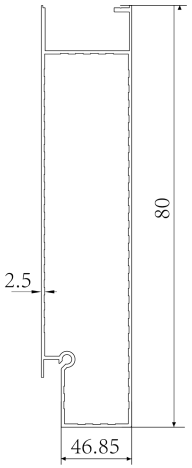

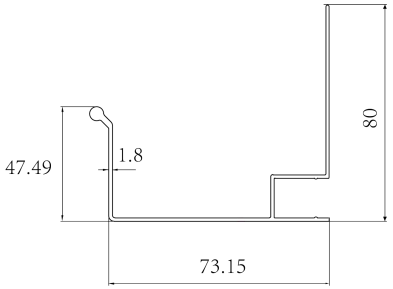

Beam size： 280x46.8x2.5mm , Sink size： 80x73.15x1.8mm



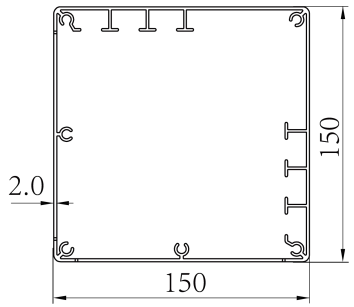

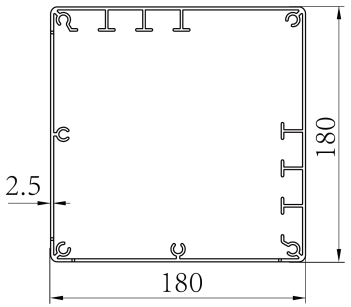

column size①： 150x150x2.0mm size②： 180x180x2.5mm

Available Size		Length Direction									
		2000	2500	3000	3500	4000	4500	5000	5500	6000	6500
Blade length	2000	★	★	★	★	★	★	★	★	★	Need to add column
	2500	★	★	★	★	★	★	★	★	★	
	3000	★	★	★	★	★	★	★	★	★	
	3500	★	★	★	★	★	★	★	★	★	
	4000	★	★	★	★	★	★	★	★	★	
	4500	★	★	★	★	★	★	★	★	★	
	5000	★	★	★	★	★	★	★	★	★	
	5500	Need to splice together									
	6000										

Note: The default height of the product is 2.7 meters.

Skeleton appearance optional colors: A set of products can be paired with multiple colors

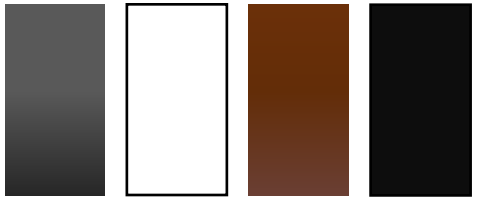

gray **white** **coffee** **black**

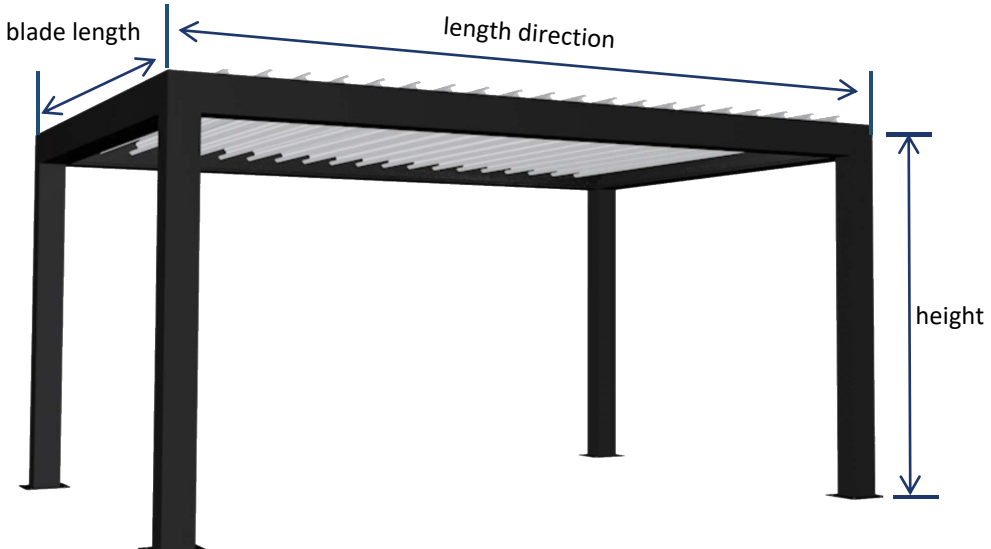

Support Large-scale Assembly

The maximum size of a single set of 220 type can reach 6x5 meters

The combination of products can be determined based on different sizes,
Paired with windproof roller blinds on all sides, it can become an ecological sunroom or even a multifunctional outdoor space
Multiple application scenarios such as office areas, live streaming rooms, restaurants, chess and card rooms, etc.

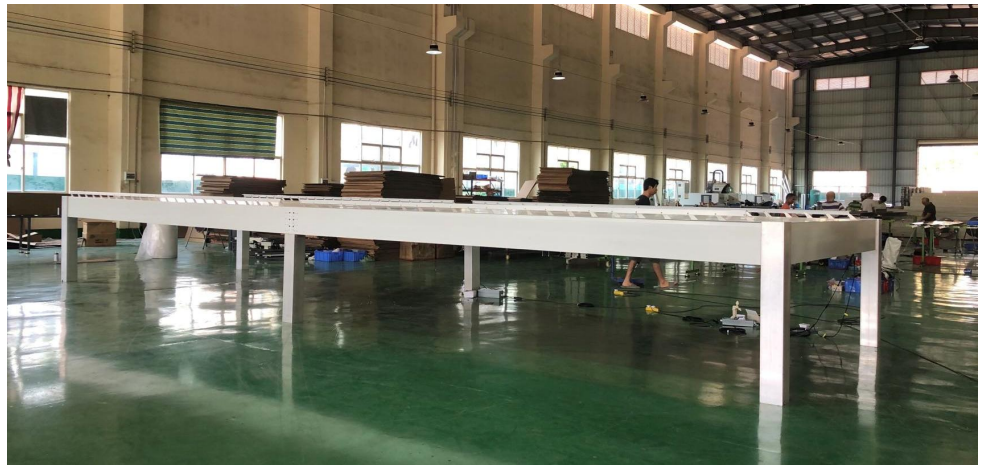

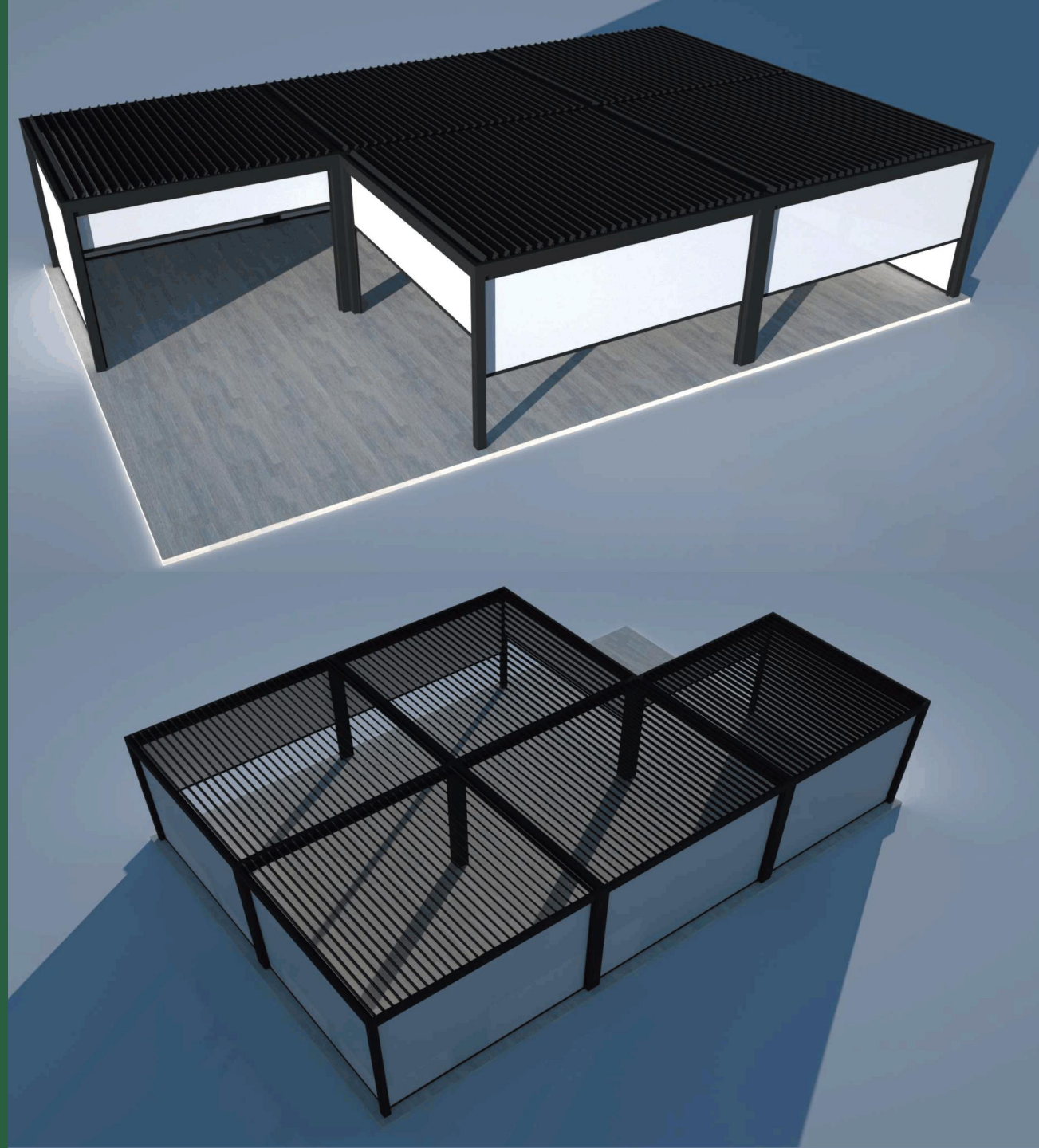

Diverse styles and multiple ways of matching



Basic version



+European style external sink



+Roman Column

Matching Instructions：

The Pergola itself has strong adaptability, except for: External sink, Roman column, windproof roller shutter, lamp post, fan light outside,
Additional features can be added: wind and rain sensing, intelligent control, glass
Grilles, heaters, colorful lights, and so on.

Note: Additional products are not included in the price of the pavilion and will be charged separately,
Or the customer can purchase and install it themselves.



+Column light+fan light



+Wind resistant roller blinds around



Install fence











Install grilles and movable blinds







Install European style external sink, Roman column, windproof roller blinds around, and Chinese style grille screen

Install glass





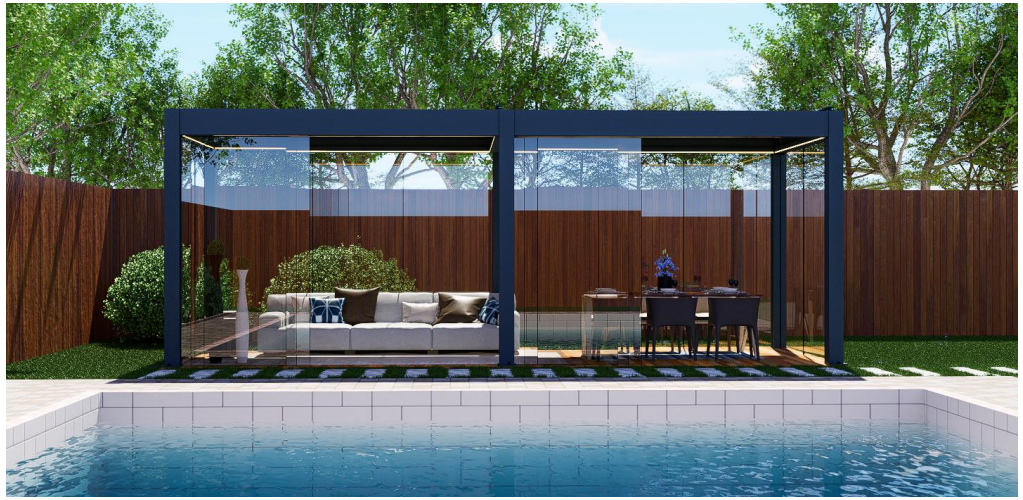

Multiple installation types



Large size multi column

Installation Type：

Aluminum alloy pavilions can be installed in various types according to the site and size, commonly including:

Standard four column type, single-sided against the wall, no column, large-sized multiple sets of splicing, large-sized multiple columns, ultra long beam splicing, etc。



Large size spliced crossbeam



Unilateral against the wall





Multiple sets of splicing

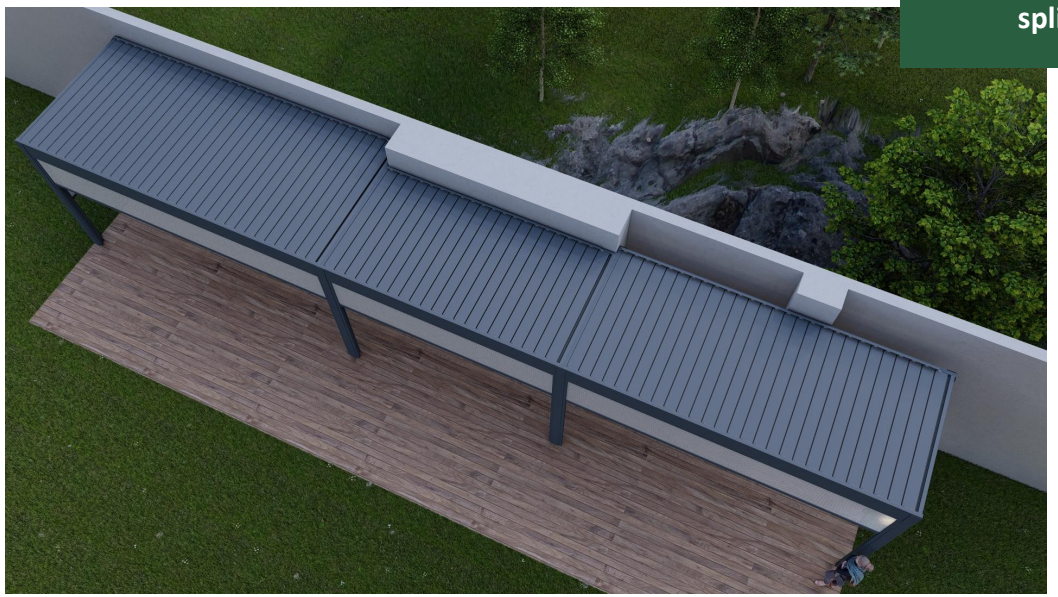









Splicing against the wall

*This case does not conform to the actual application of the product and only provides a scenario reference.

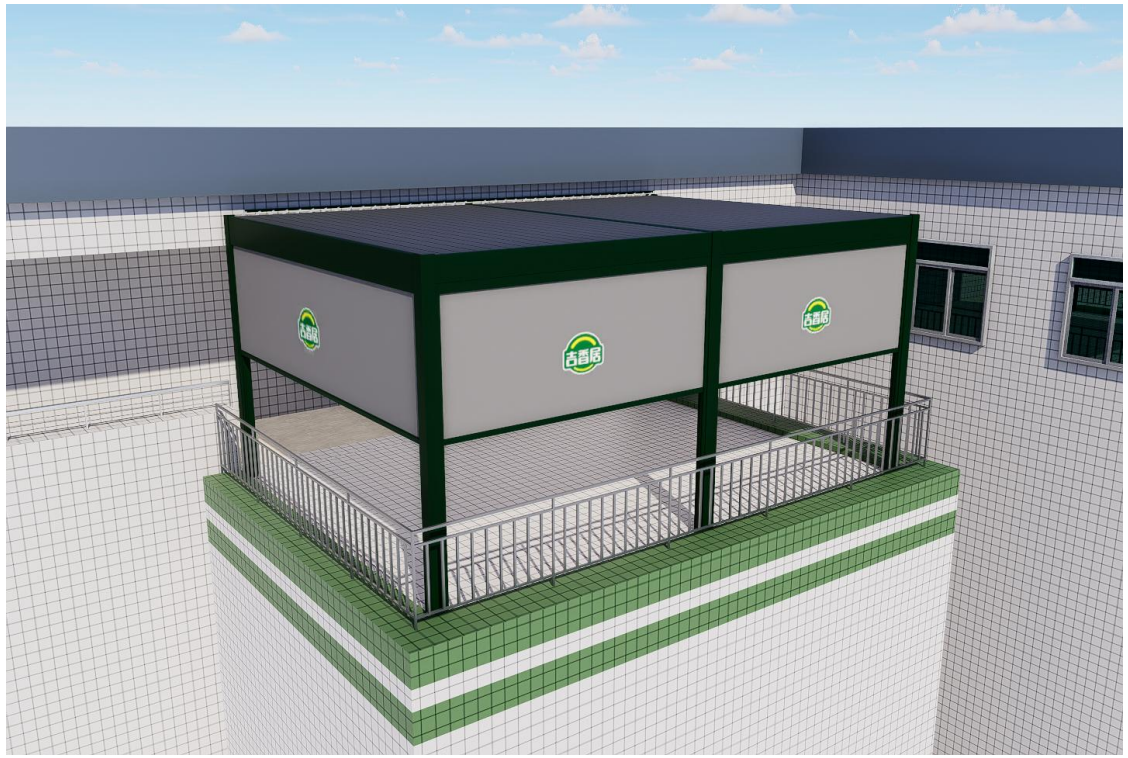





Two sets of spliced six columns







No pillars, customized frame

It can also be used for wall mounted installation on all sides without columns

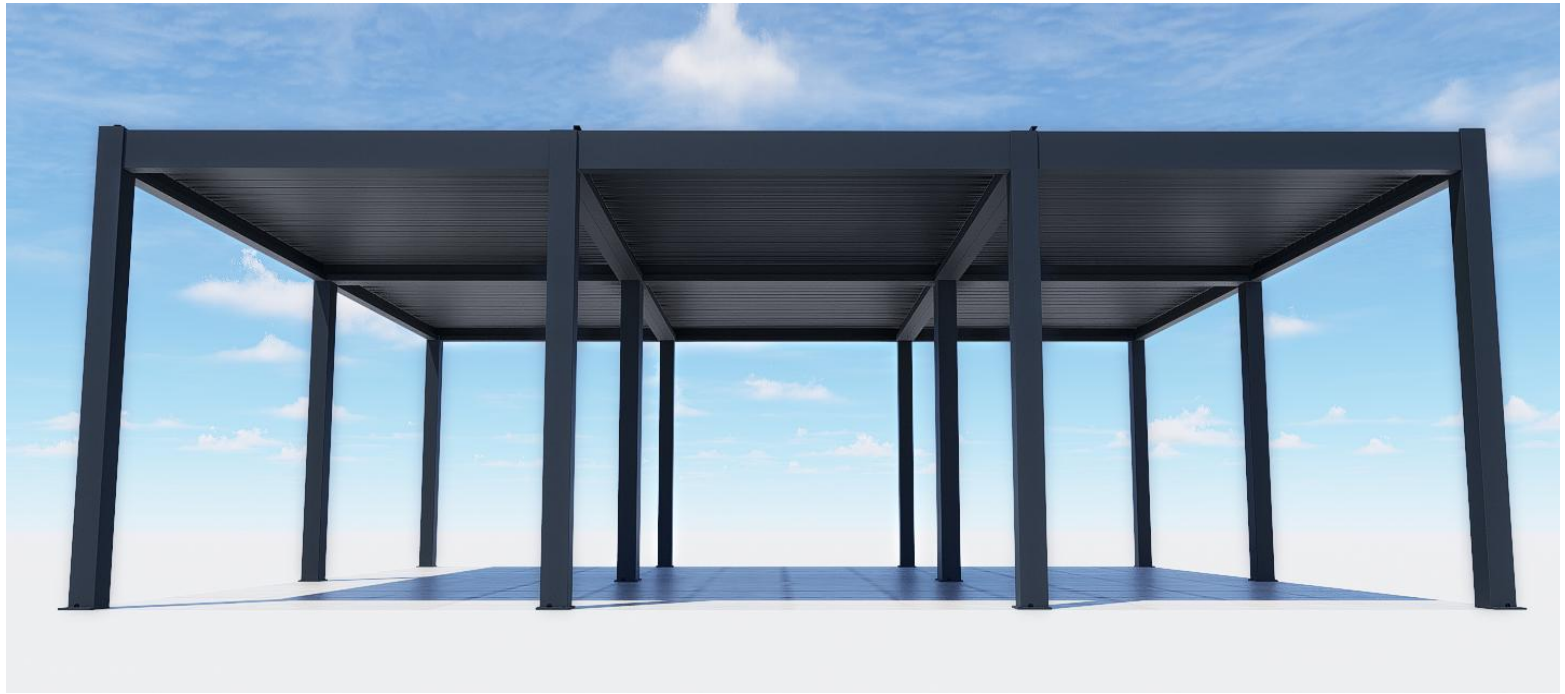

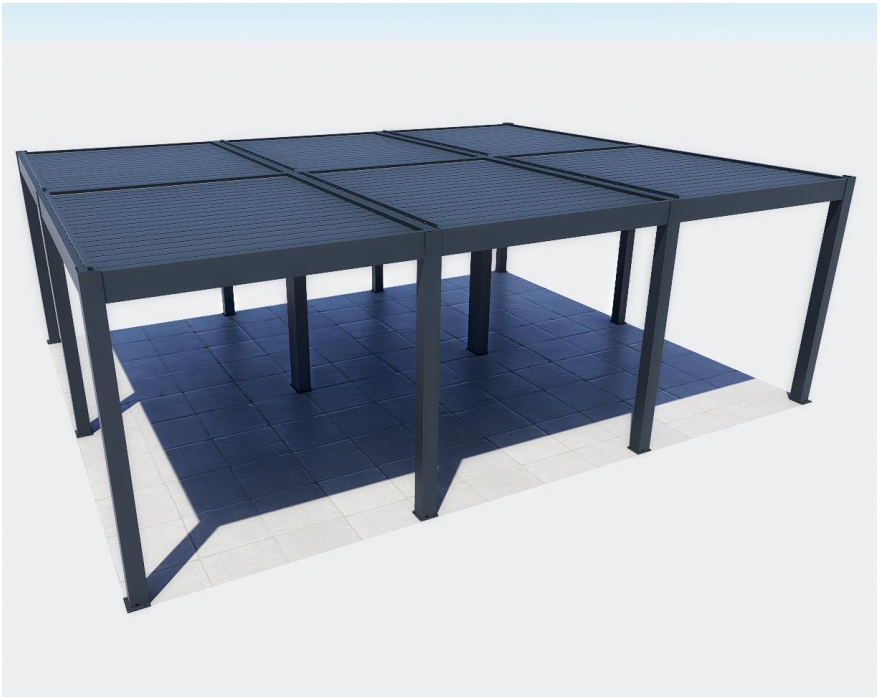

Oversized size, multi top splicing

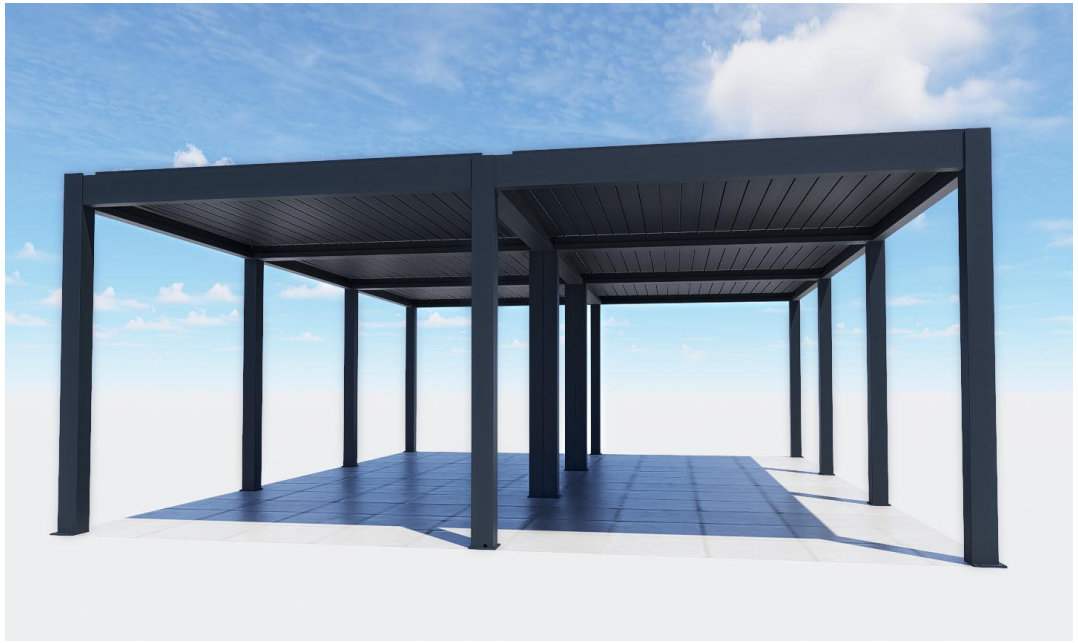

Application scenarios



Villa Residence



swimming pool



Garden Courtyard



Balcony terrace



Homestay leisure



Outdoor dining