

WINDPROOF ZIPER BLINDS

PRODUCT CATALOGUE

2023



CONTENTS

01. Product Introduction

02. Product Installation Method

03. Motor / Fabric Introduction

04. Product Application Scenarios

01. Product Introduction

Introduction, profile, parameters, customization

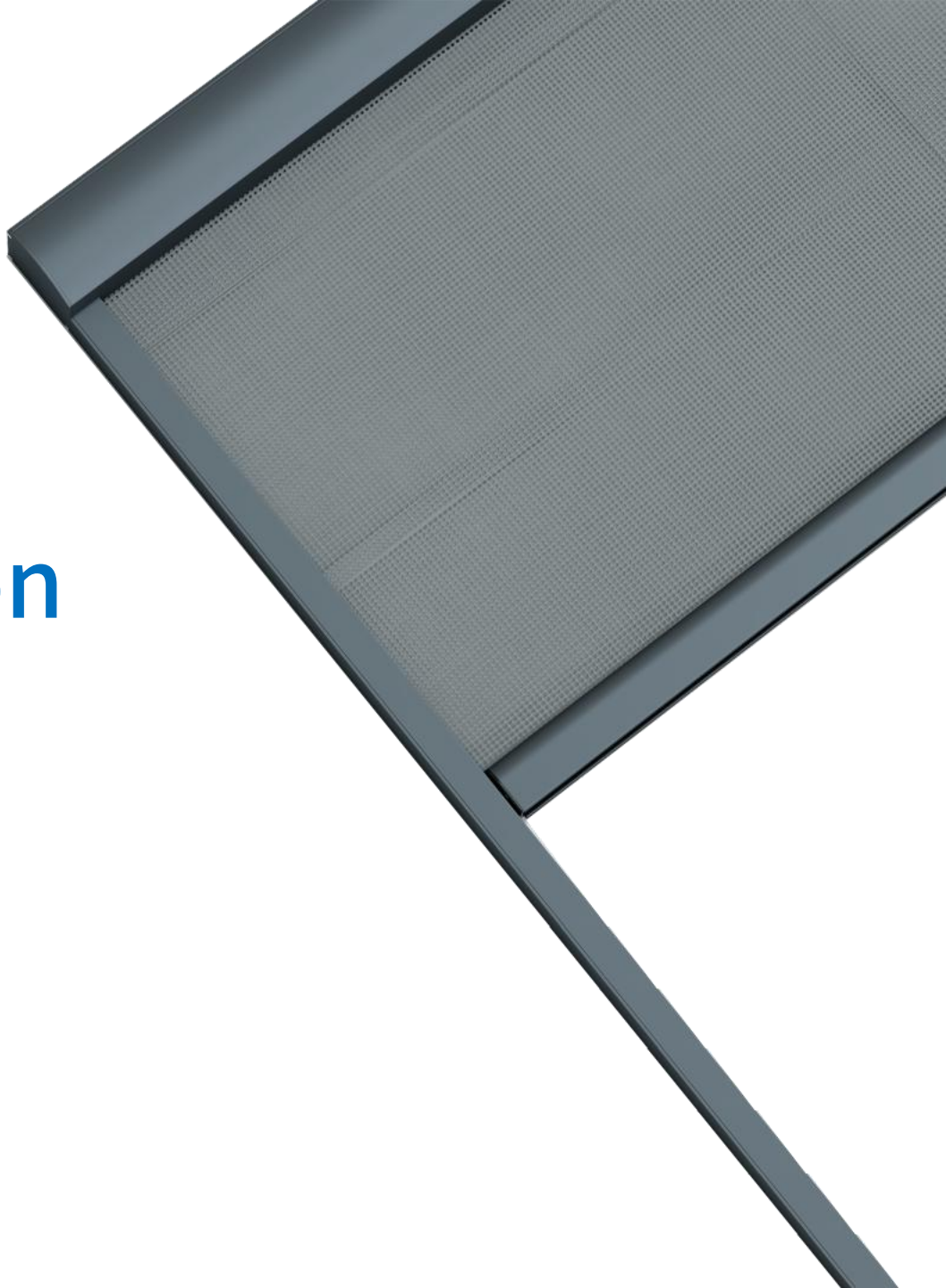

Smart Sunshade Windproof Roller Blind

wind resistance | Sun protection | Rain protection | Mosquito control | Protect privacy | Breathable and transparent

- Windproof curtain is the latest popular windproof sunshade and rain products, can be applied to: high-end hotels, home balcony, window sill, pavilion, sunroom and other places; And can realize the balcony window sealing, partition, windproof rain shading various functions;

- Aluminum alloy frame, sunny fabric, a variety of colors, open rate optional; The color pattern can be customized, which can realize full shading/semi-shading, and the actual shading effect is better than the traditional inner shading;

- The fabric of windproof curtain has been tested and certified by domestic and foreign authorities, with green environmental protection, fire retardant, no formaldehyde and other characteristics, ten years of product quality assurance, superior technology, excellent quality.



Part Drawing

1. Finished product delivery

Windproof shutter factory after assembly test passed, packaging delivery (shutter + motor + cover shell assembly packaging; Track assembly packaging)

2. Size limitation

The widest 7 meters,
the highest 8 meters;
Manual model: The narrowest can do 800mm
Electric model: The narrowest can do 700mm

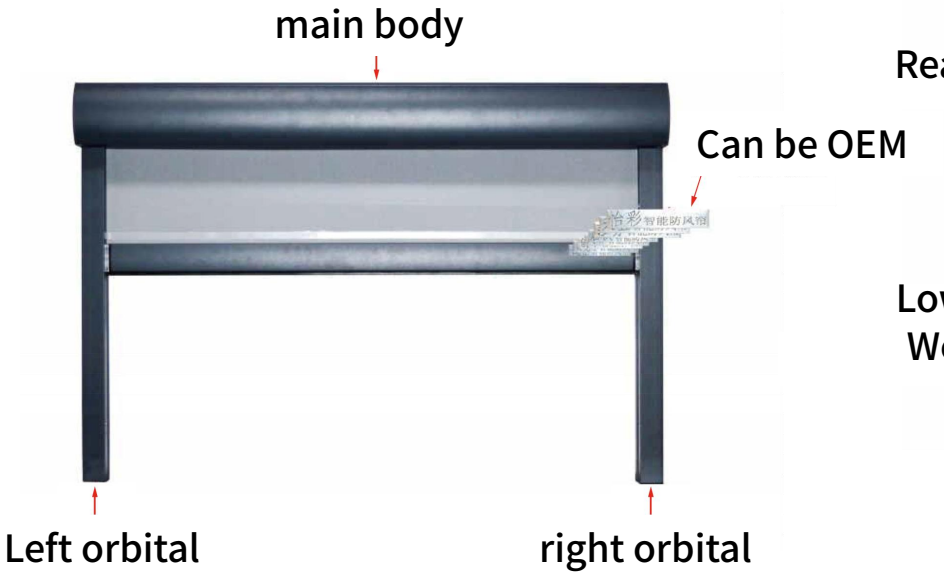

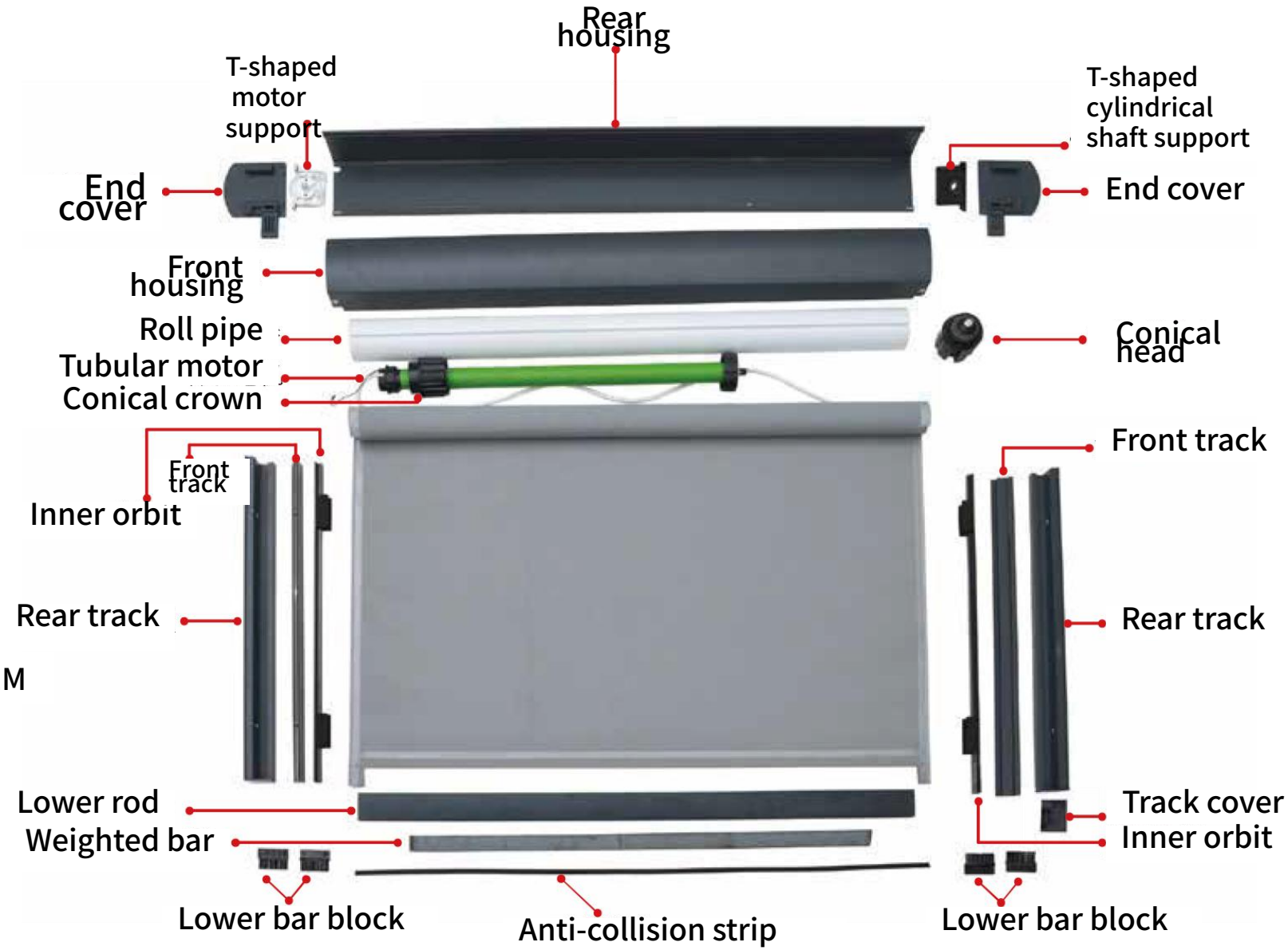

Three types of profile sizes

	Housing	Lower rod	Track	Roll Pipe	Motor outlet selection
100type	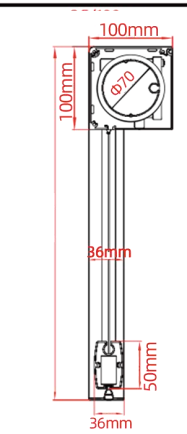	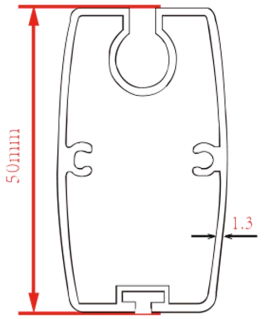	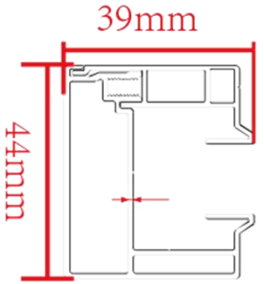	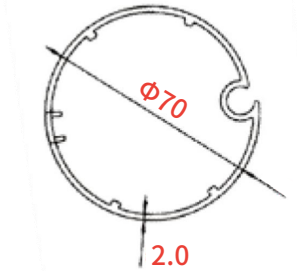	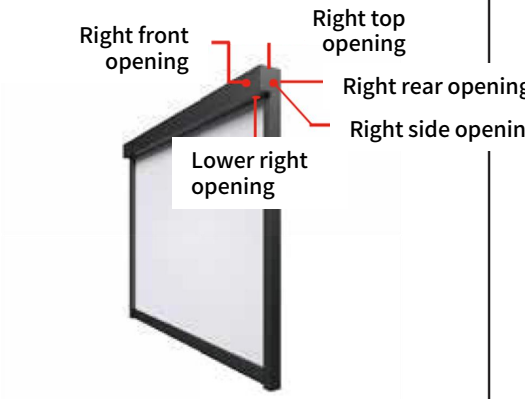
108type	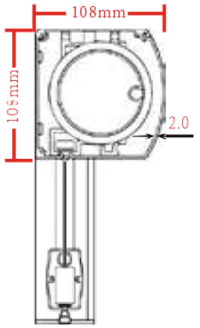	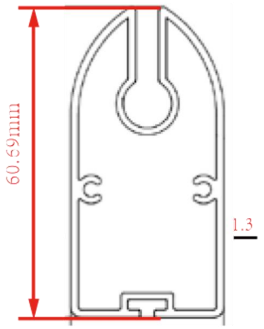	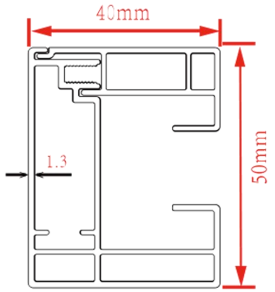	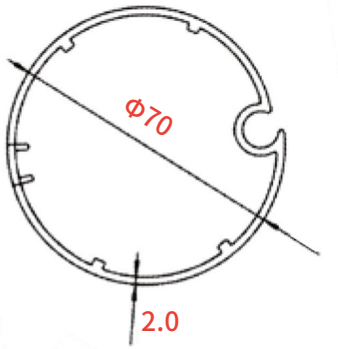	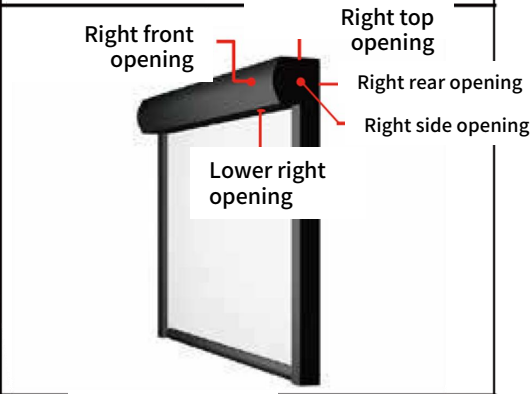
130type	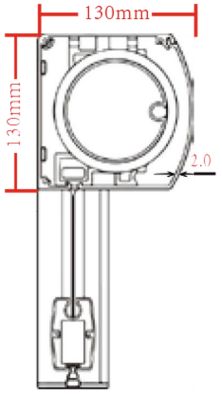	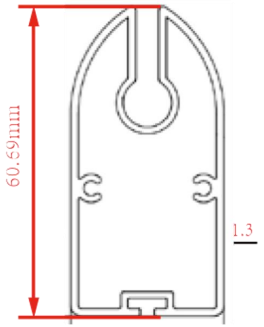	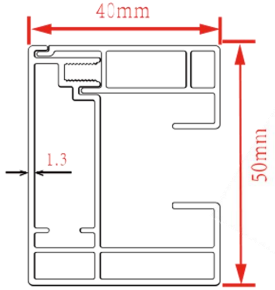	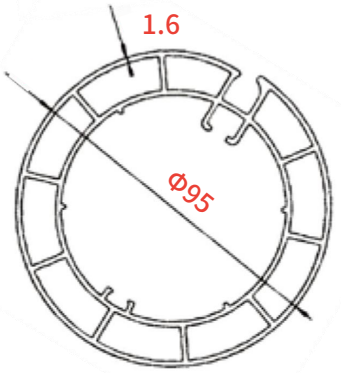	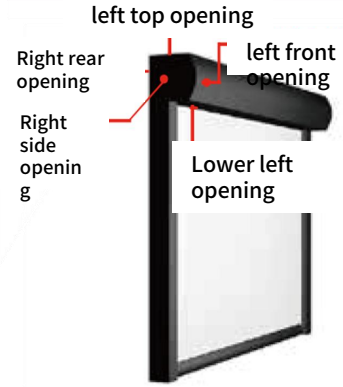

100type Parameter



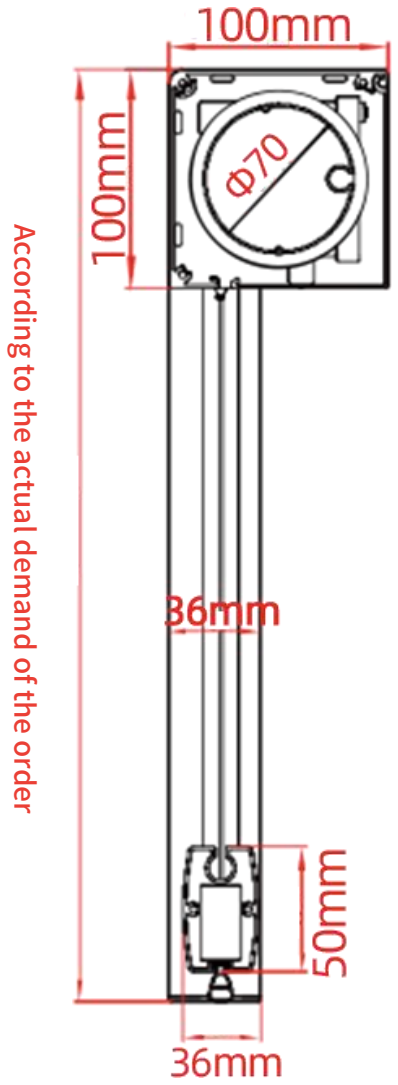

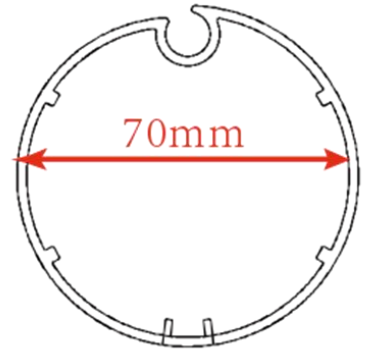

70mmRoll Pipe

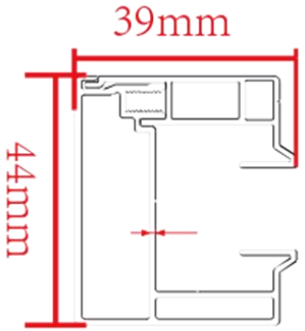

Track

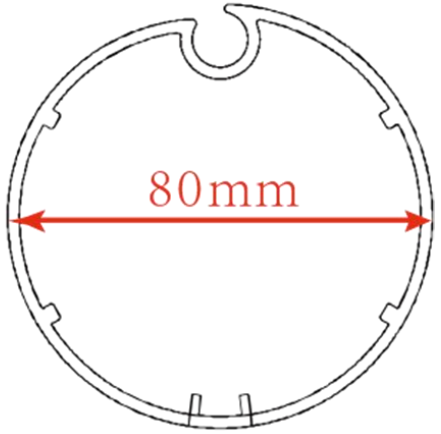

80mm Roll Pipe

- 100mm cover shell with 70-80 roll cloth tube, the widest can do *4meters*, the highest can do *2.8 meters*.

108type Parameter



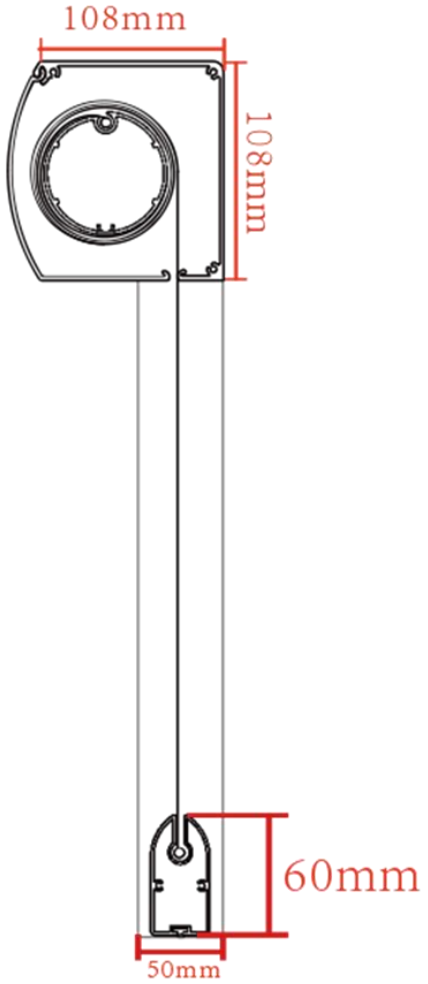

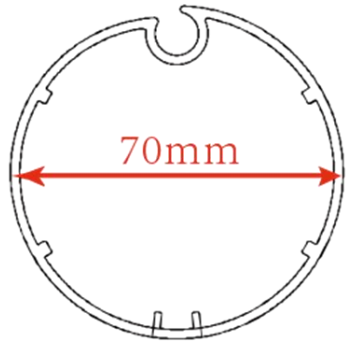

70mmRoll Pipe

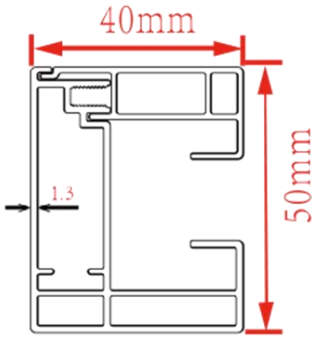

Track

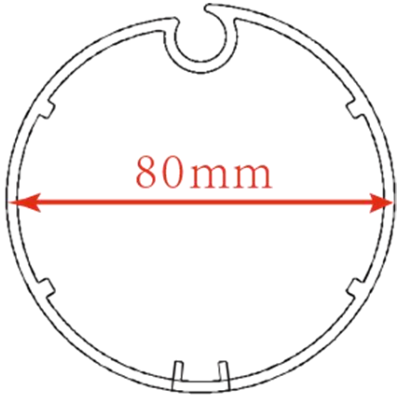

80mm Roll Pipe

- 108mm cover shell with 70-80 roll cloth tube, the widest can be made ***5 meters***, the highest can be made ***5.5 meters***.

130type Parameter

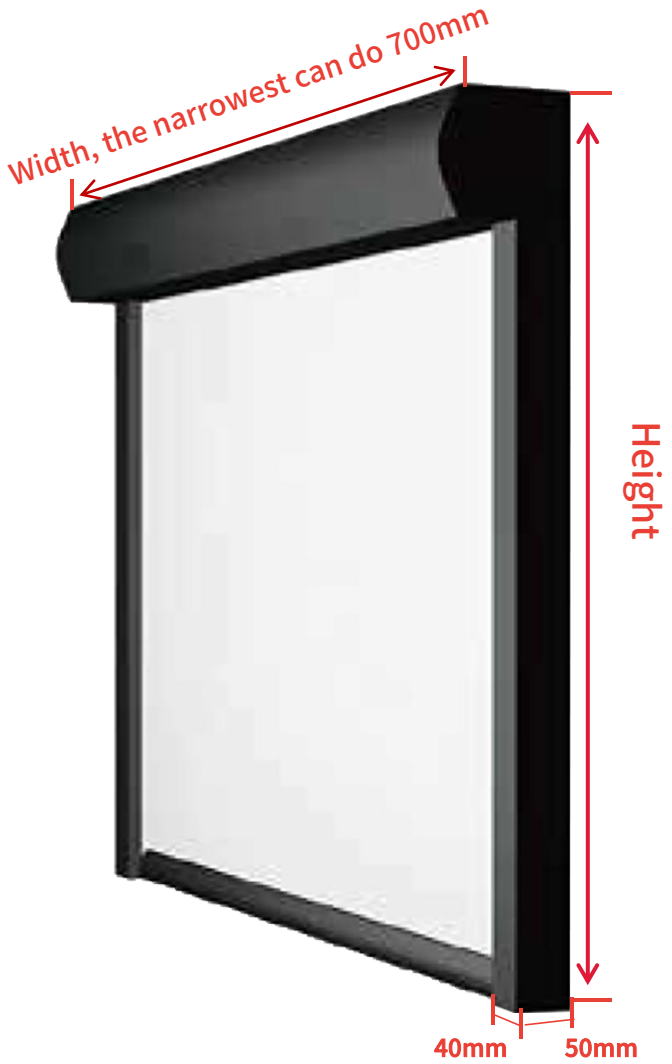

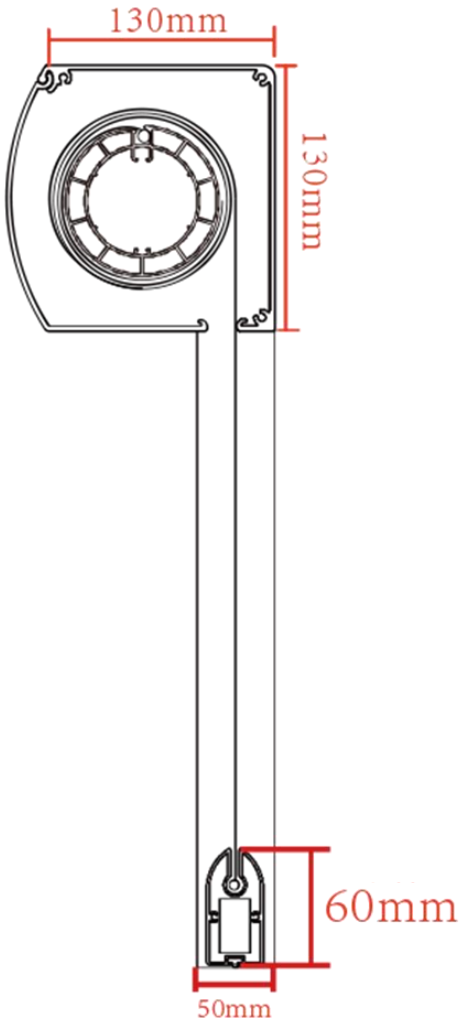

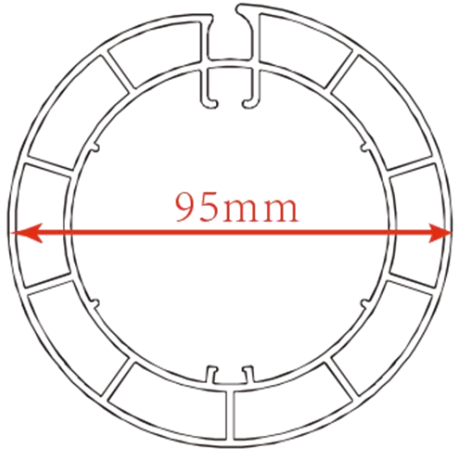

95mm Roll Pipe

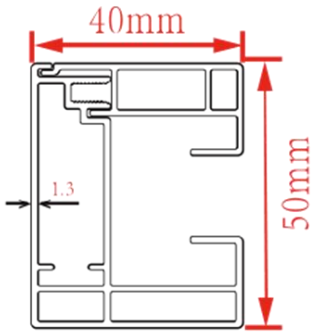

Track

- 130mm cover shell can be made *7 meters wide*, with 70 rolls of cloth tube, the highest can be made *8 meters*, with 95 rolls of cloth tube, the highest can be made *5 meters*.

Color /Pattern Customization

Fabrics can be printed with a variety of patterns, text and logos



Printable pattern

Regular aluminum color

(Other colors can also be customized)



Light grey

Dark grey



White

Brown

02. Product Installation Method

Front mounting, Side mounting, installation tutorial

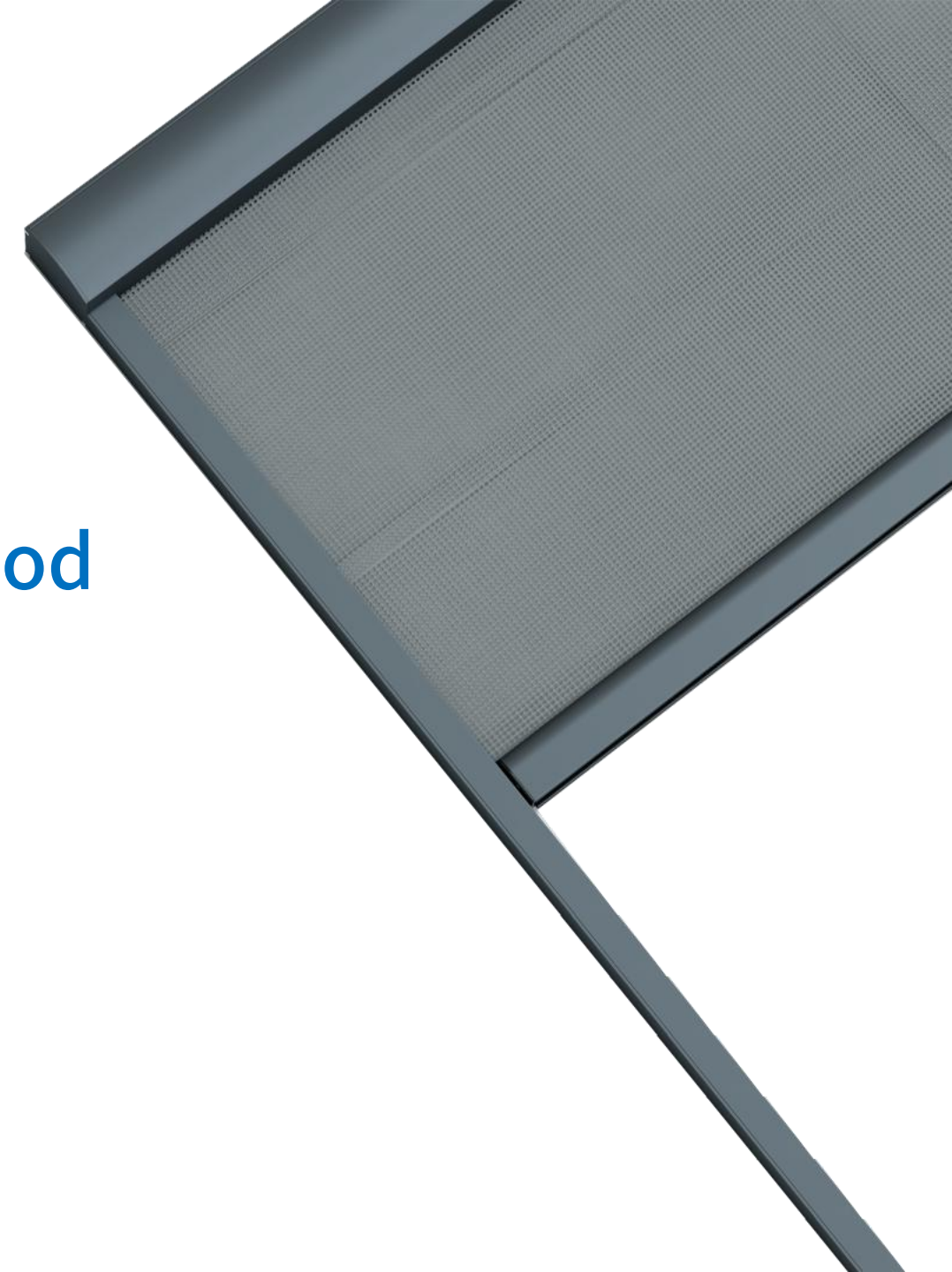

Installation Method of Rolling Curtain

Front mounting, Side mounting

Scan the code for the installation tutorial



Front Mounting
(outside the frame)

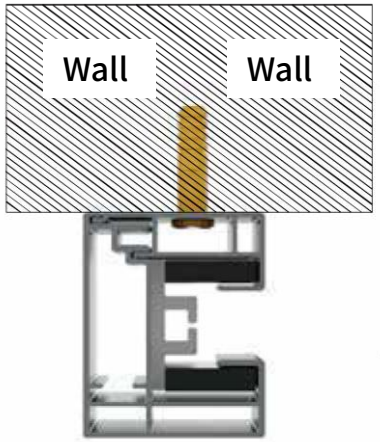

The track is mounted outside the frame and the track fixing screws are driven from the side of the track.



Side Mounting
(inside the frame)

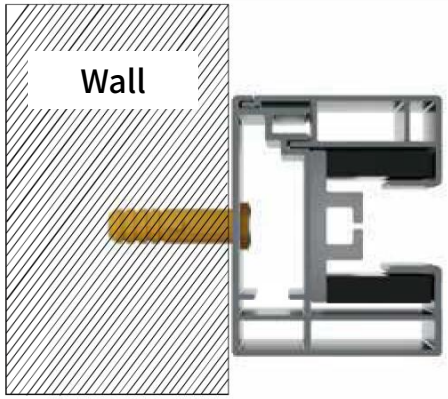

The track is installed in the frame and the track fixing screws are drawn from the underside of the track.

Installation FAQ

· The balcony is too wide, exceeding the maximum width of the windproof curtain?

· What should I do if the floor is too high and the curtain is too long to take up?

· What if the balcony has no corner support?

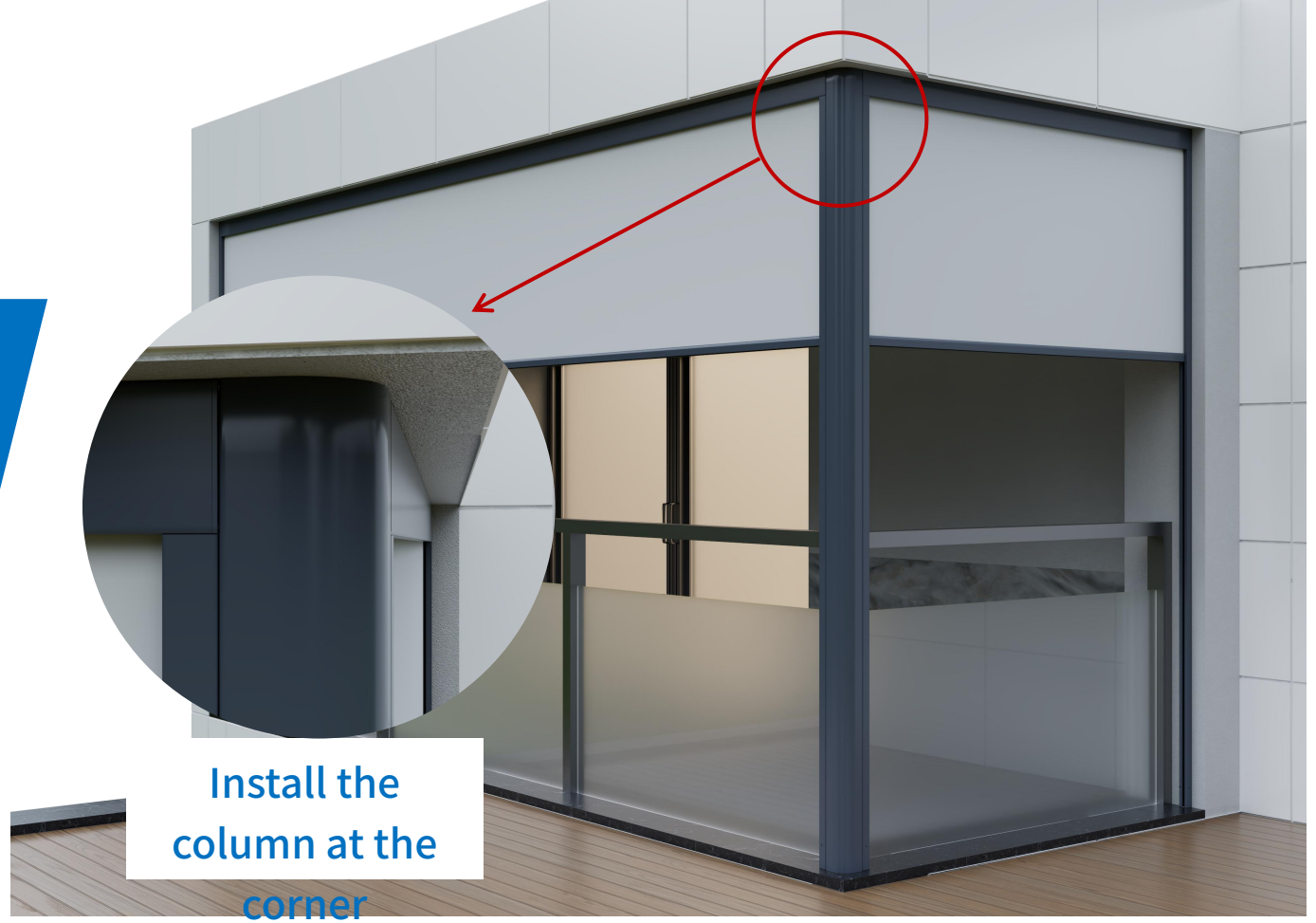

Install the column at the corner

Install columns to solve all problems

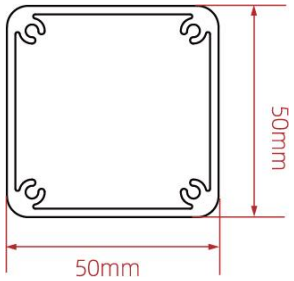

Right Angle column

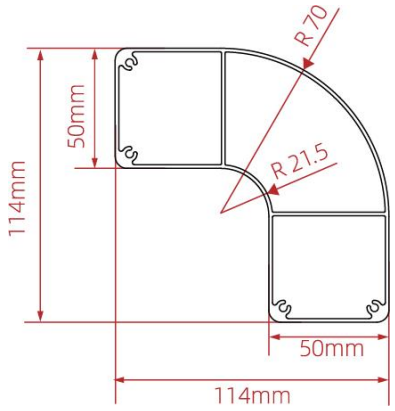

Angle column

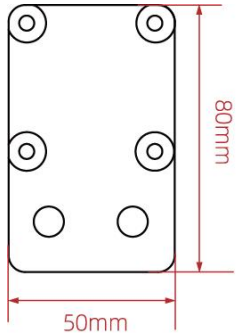

Column bottom plate

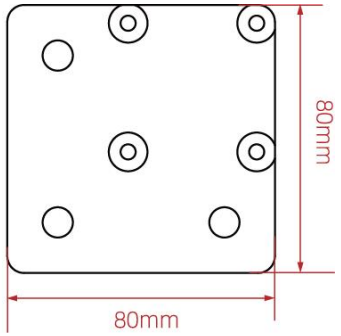

Column bottom plate



Side by side installation, the middle of the column

03. Motor/Fabric Introduction

Motor, remote control, opening rate, cloth

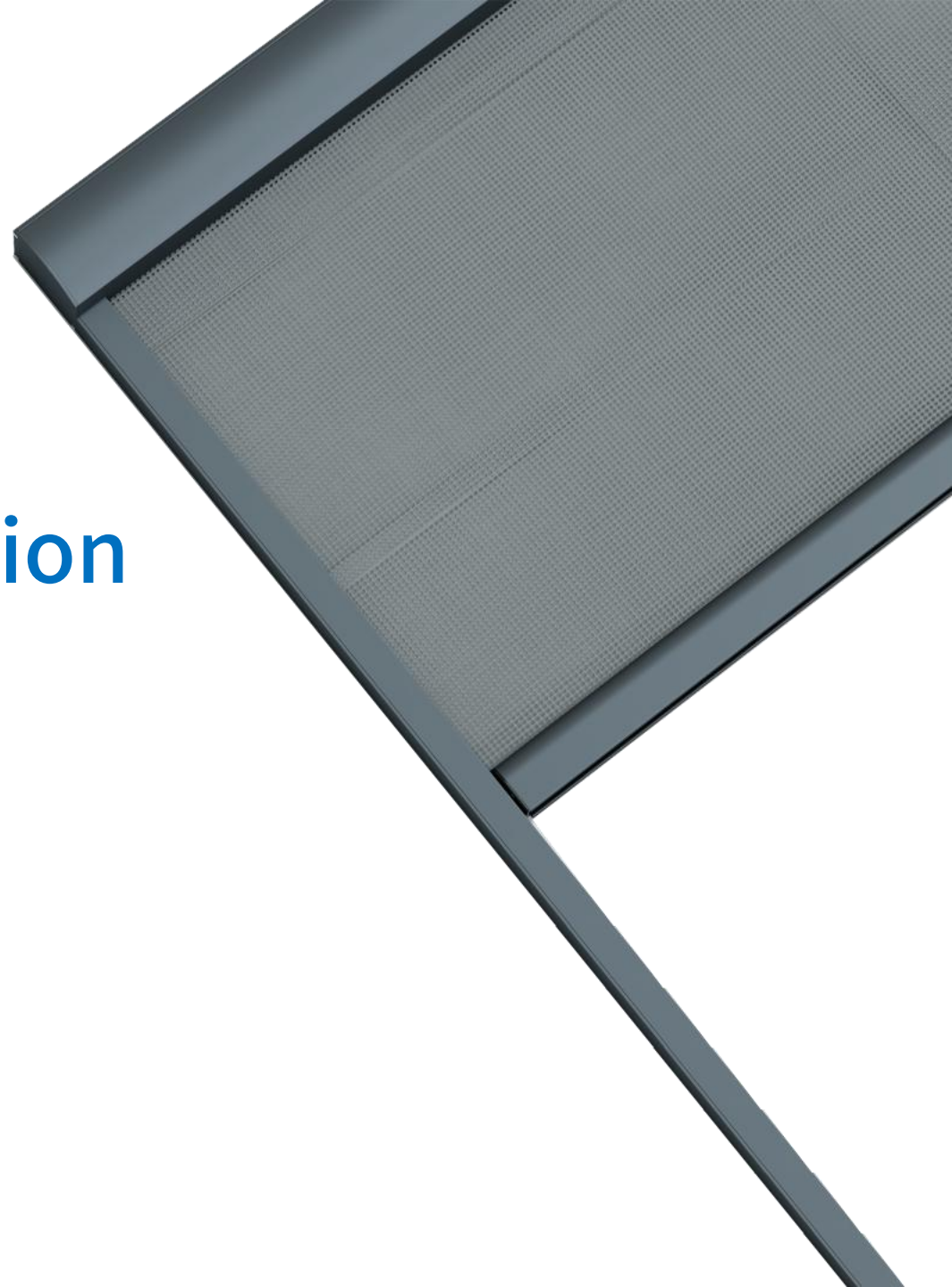



Motor/Fabric Introduction

Motor selection： 10N/50N

The standard configuration of windproof shutter motor is the built-in silent 10N motor (used within 4 ㎡), greater than 4㎡, each set of 50N motor;

Remote control:

single frequency： A remote control intelligently controls a motor；

dual frequency： A remote control can respectively control two motors (curtain), can not control two together lifting；

multi-frequency： A remote control can simultaneously control 15 motors (rolling curtains) at the same time up and down, can also control the rise or fall of each one, customers can choose according to their actual needs, Duya motor equipped with WiFi remote control module, can connect to the Tmall genie, mobile phone control and remote control。

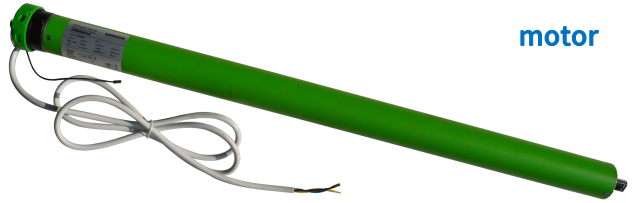

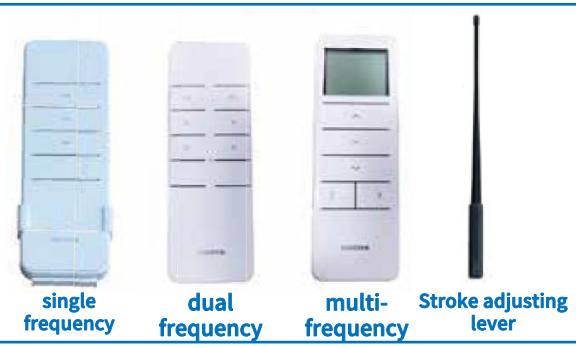



Fabric FAQ Answer

01 What is the shading effect of the fabric?

Sunlight fabric according to the opening rate to divide, there are full shading and half shading two; Full shading is 100% shading rate, 0 light transmission (positive and negative color the same), shading effect is good, durable, shading effect is better than all kinds of traditional internal shading, semi-shading 2%, 5%, 10%, 20%, etc., can be freely customized, light/scenery/breathable/rain/mosquito prevention.

02 What is the opening rate?

Take the fabric with 2% porosity as an example, that is, all the holes in a piece of fabric are gathered together, accounting for 2% of the total area of the whole fabric, which is called 2% porosity.

03 Installed in the outdoor, rainy day will seep water?

Because the holes on the fabric are very small and the surface of the fabric is very smooth, the fabric with 5% and 10% opening rate will not penetrate into the fabric when the rain is raining, except the fabric with more than 10% opening rate.

04 Will the wind and rain blow it?

Windproof curtain is different from the traditional hand-pulled shade curtain and curtain, the top of the cloth is fixed in the tube, the lower part is fixed in the lower rod, the two sides of the fabric are welded with zipper, down the zipper lock on both sides of the plastic track, the plastic track is wrapped in aluminum alloy track, fixed on the wall; The fabric is fixed up and down around the left and right, plus the fabric holes, with air permeability, will not swing in the face of strong wind, can resist the wind of 8-10.

INSPECTIONCER TIFICATE

Shading/heat insulation/noise reduction/environmental protection/formaldehyde-free/flame retardant/non-fading/mildew proof and antibacterial



【GREEN GUARD】



【OK-TEX test】



【Flame retardant B1 level test certification】



【Mildew and antibacterial test report】

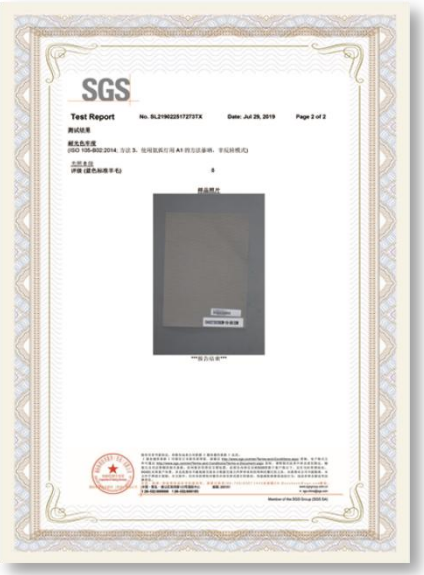

【Color fastness test report】



【Formaldehyde free test report】

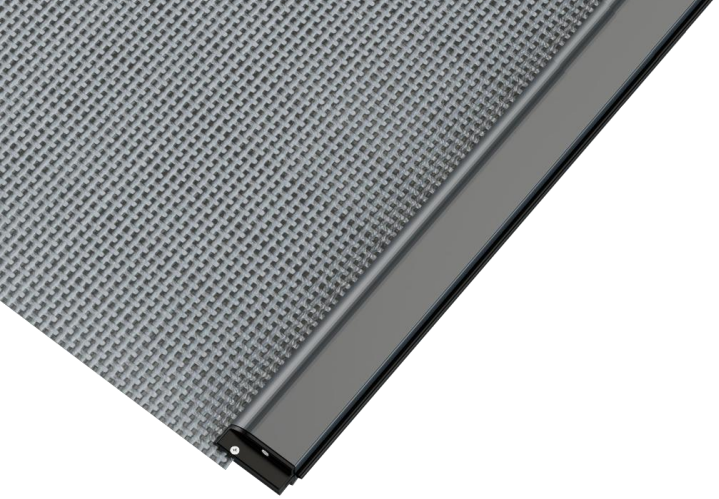

Types of fabrics

- **Sun Fabric**
  - **Polyester Fibre**
    - **Total Shading**
    - **Semi-Shading**
  - **Transparent fabric PVC**
    - 
    - Super permeability and cold proof, thickness 0.8mm door width (width) 1.8m
  - **Glass Fibre**
    - **Glass Fibre**
    - **Coloured Glass Fibre**
    - **Twill Glass Fiber**

Polyester Fabric

Shading/heat insulation/ventilation/flame retardant/antibacterial



- 1, both shading, light transmission, ventilation performance, up to 99% of the solar radiation can be offset, but also can keep the air unimpeded;
- 2, excellent fire performance, polyester fiber fabric with other fabrics do not have flame retardant performance, after professional test fire rating for the national standard B1 refractory materials;
- 3, moisture-proof, bacteria can not reproduce, fabric will not mildew;
- 4, tear resistance, do not need to strengthen, natural break resistance, has significant wind resistance and withstand frequent use of bending performance.

HJ- Polyester Fiber Series		
Project	Implementation Standard	Parameter
Material		25% Polyester Fiber +75%PVC
Porosity	FZ/T01009-2008	≈5%
Gram Weight	GB/T4669-2008	540g/m²
Thickness	FZ/T01003-1991	0.75mm
UV shading rate		About 95%
Fire protection standard	GB50222-1995	National standard B1 level

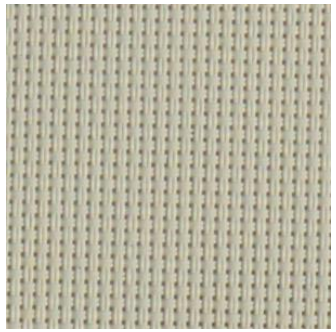
HJ-5001


HJ-5002


HJ-5003


HJ-5004

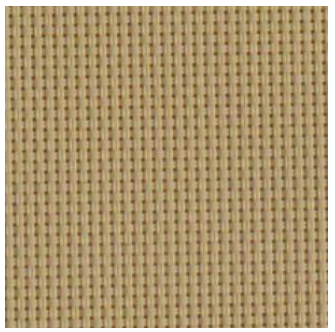
HJ-5005

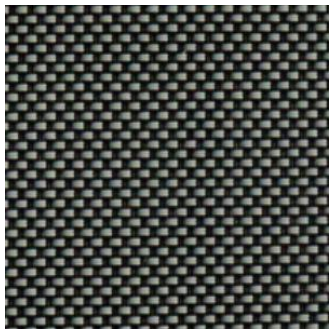
HJ-5006


HJ-5007

HJ- Polyester Fiber Series		
Project	Implementation Standard	Parameter
Material		47% Polyester Fiber +53%PVC
Porosity	FZ/T01009-2008	5%
Gram Weight	GB/T4669-2008	320g/m²±5%
Thickness	FZ/T01003-1991	0.4mm
UV shading rate		≈ 95%
Fire protection standard	DIN4102	National standard B1 level



HJ-5101



HJ-5102

HJ- Polyester Fiber Series		
Project	Implementation Standard	Parameter
Material		78%PVC+22%Polyester
Porosity	FZ/T01009-2008	1%
Gram Weight	GB/T4669-2008	510g/㎡
Thickness	FZ/T01003-1991	0.66mm
UV shading rate		≈ 99%
Fire protection standard	GB17591-2006	National standard B1 level



HJ-5201



HJ-5202

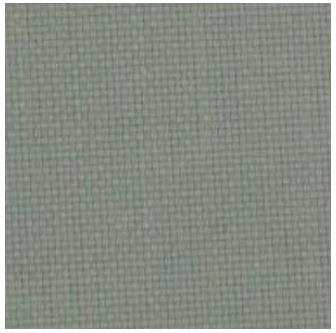

HJ-5203

HK- Polyester Fiber Series		
Project	Implementation Standard	Parameter
Material		75%PVC+25%Polyester
Porosity	FZ/T01009-2008	0%
Gram Weight	GB/T4669-2008	630g/㎡
Thickness	FZ/T01003-1991	0.78mm
UV shading rate		≈ 100%
Fire protection standard	GB17591-1996	National standard B1 level


HK-8001


HK-8002


HK-8003

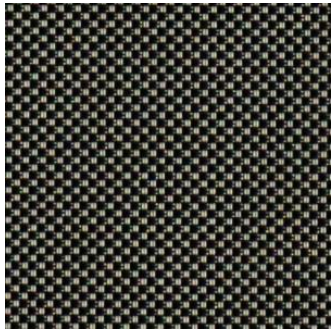
HK-8004


HK-8005

HT-Polyester Fiber Series		
Project	Implementation Standard	Parameter
Material		25%Polyester+75%PVC
Porosity	FZ/T01009-2008	**20-30%**
Gram Weight	GB/T4669-2008	540g/㎡
Thickness	FZ/T01003-1991	0.75mm
UV shading rate		≈ 70-90%
Fire protection standard	GB17591-2006	National standard B1 level

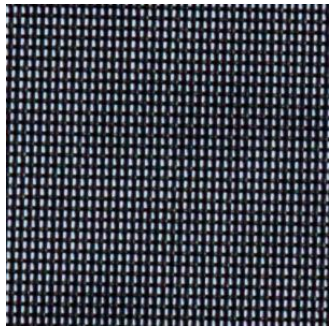

HT-001



HT-002

HD- Polyester Fiber Series		
Project	Implementation Standard	Parameter
Material		25%Polyester+75%PVC
Porosity	FZ/T01009-2008	**10%**
Gram Weight	GB/T4669-2008	560g/㎡
Thickness	FZ/T01003-1991	0.7mm
UV shading rate		≈ 70-90%
Fire protection standard	DIN4102	National standard B1 level



HD-3001



HD-3002

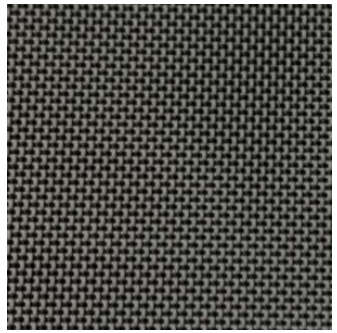

HD-3003

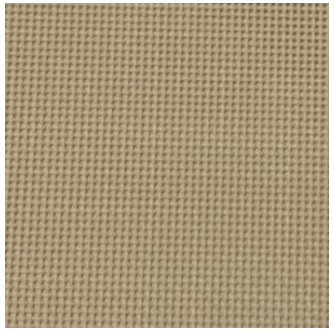

HD-3004



HD-3005

HA- Polyester Fiber Series		
Project	Implementation Standard	Parameter
Material		25%Polyester+75%PVC
Porosity	FZ/T01009-2008	0%
Gram Weight	GB/T4669-2008	540g/㎡
Thickness	FZ/T01003-1991	0.65mm
UV shading rate		≈ 70-90%
Fire protection standard	DIN4102	National standard B1 level


HA-6001

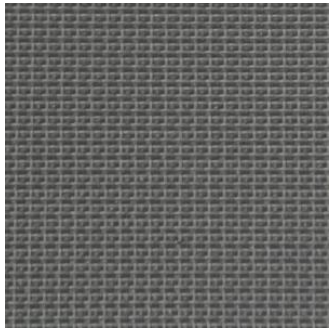
HA-6002

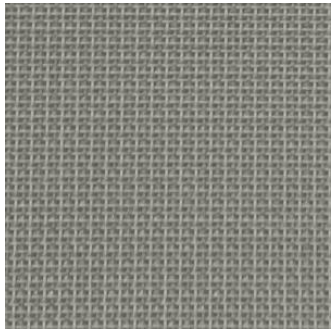
HA-6003


HA-6004


HA-6005

Glass Fiber Fabric

Never shrink/shade/ventilation/no deformation/flame retardant

- 1, glass fiber fabric with shading, heat insulation, noise reduction, ventilation, UV protection, flame retardant, and other characteristics, can not only ensure indoor privacy, but also can clearly see the outdoor scenery, to ensure the smooth indoor air, effective filtering dailing-light, access to natural light, visual comfort.

- 2. The fabric has passed GREENGUARD and GREENGUARDGOLD American indoor air quality certification, combined with the lead content requirements of children's products in American consumer products, passed the European OEKO-TEX100 harmful substances detection, combined with the European human ecology requirements and combined with the European REACH regulations. Passed the fire retardant test in Australia, the United States, the United Kingdom, Germany, France, China, very suitable for the use of fire prevention requirements of hotels and other commercial buildings;

- 3. The fabric has passed the ULTRA-FRESH anti-mold test in Canada with good moisture-proof, mildew proof and antibacterial effect. The fabric is a natural mineral, which does not provide bacteria growth environment, so that bacteria and mold cannot reproduce, and the fabric will not become mildew; Especially suitable for kindergartens, schools, hospitals..... Etc.

- 4, the size is constant, the material of the fabric itself decides that it is not malleable, and keeps the flatness, no warping, expansion <0.5%, tear resistance: does not need to strengthen the natural tear resistance, has significant wind resistance and mechanical properties of frequency integration.

HB- Twill Glass Fiber Series		
Project	Implementation Standard	Parameter
Material		30%Glass Fiber+70%PVC
Porosity	FZ/T01009-2008	≈ 2%
Gram Weight	GB/T4669-2008	660g/㎡
Thickness	FZ/T01003-1991	1mm
UV shading rate		≈98%
Fire protection standard	GB50222-1995	National standard B1 level



HB-2001



HB-2002



HB-2003

HB- Glass Fiber Series		
Project	Implementation Standard	Parameter
Material		30% Glass Fiber +70%PVC
Porosity	FZ/T01009-2008	≈ 5%
Gram Weight	GB/T4669-2008	600g/㎡
Thickness	FZ/T01003-1991	0.75mm
UV shading rate		≈ 95%
Fire protection standard	GB50222-1995	National standard B1 level


HB-5001

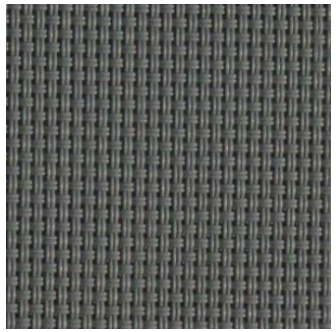
HB-5002

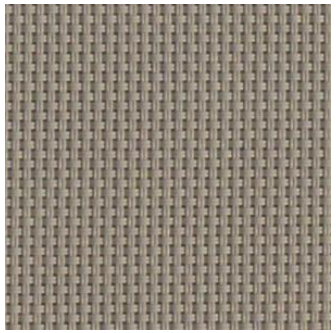
HB-5003


HB-5004


HB-5005

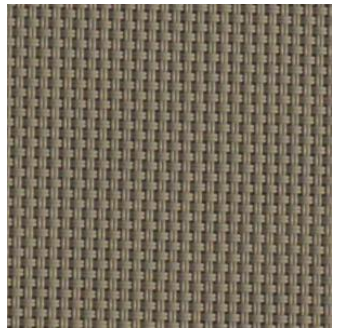
HB-5006

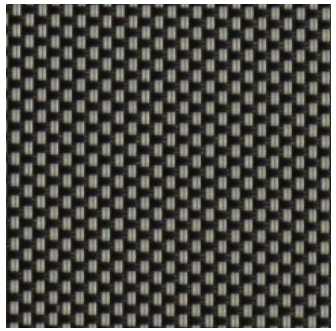
HB-5007

HC- Stained Glass Fiber Series		
Project	Implementation Standard	Parameter
Material		30% Glass Fiber +70%PVC
Porosity	FZ/T01009-2008	≈5%
Gram Weight	GB/T4669-2008	600g/㎡
Thickness	FZ/T01003-1991	0.75mm
UV shading rate		≈ 95%
Fire protection standard	GB50222-1995	National standard B1 level


HC-6001

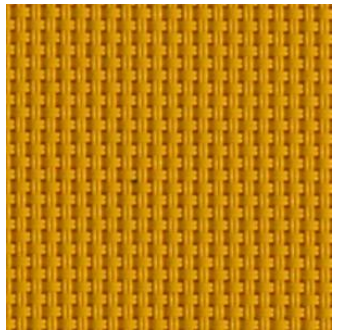
HC-6002


HC-6003


HC-6004

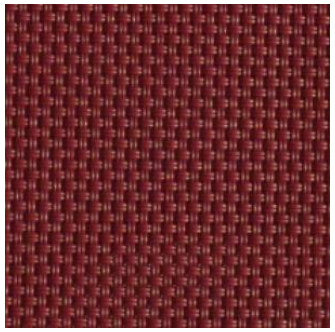
HC-6005

04. Product Application

Seal balcony, window shade, pavilion, canopy, home improvement industry

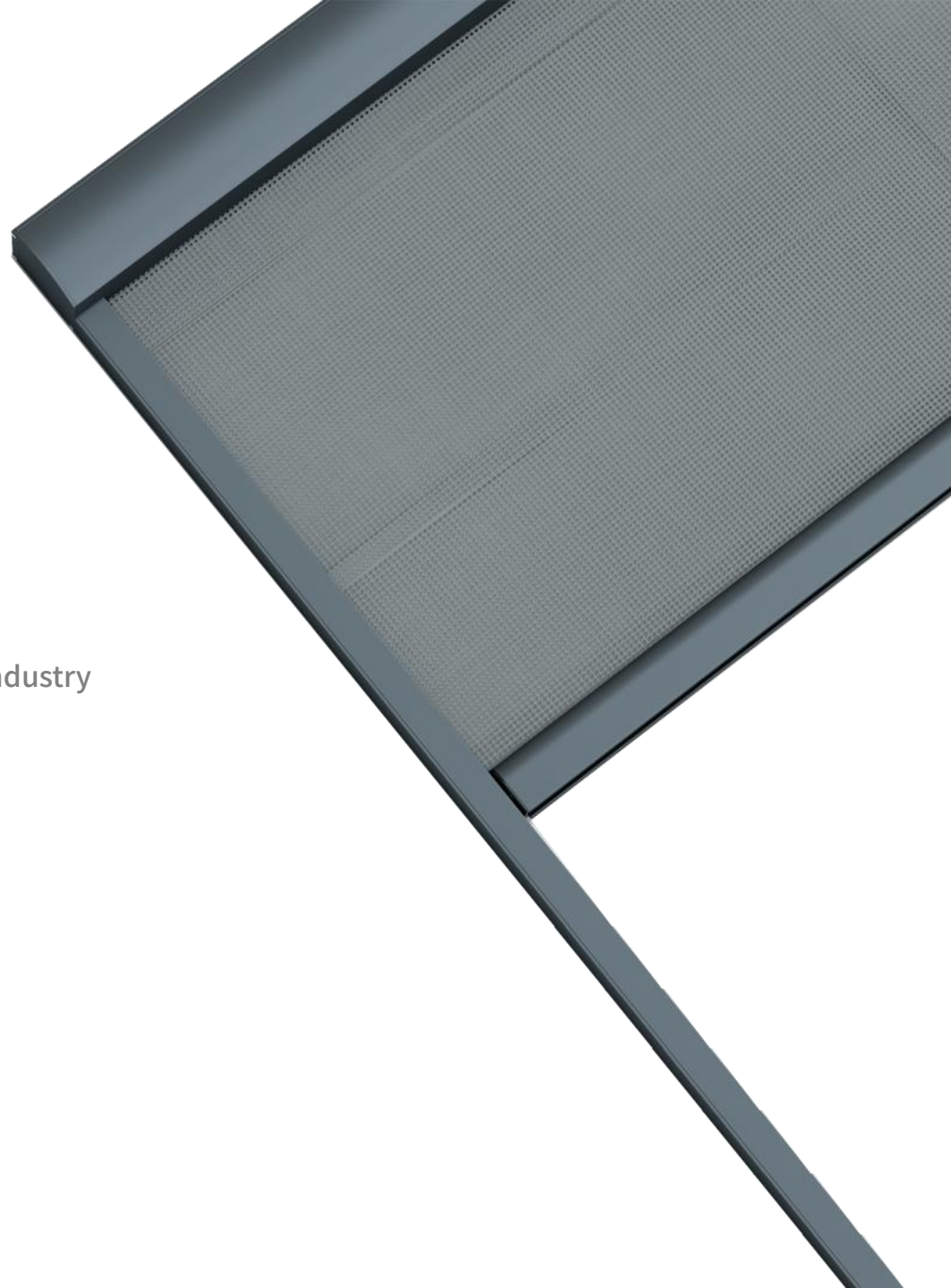

Balcony Window Sealing

- With the development of urbanization, more and more people live in tall buildings, but does the balcony seal the Windows? Property does not allow window sealing? Dirty balcony on rainy days? It has become a headache for everyone. The stuffy glass window sealing and the expensive cost also make people prohibitive, so the windproof curtain comes into being. More and more people choose to replace the window sealing with windproof curtain to create their own comfortable balcony.



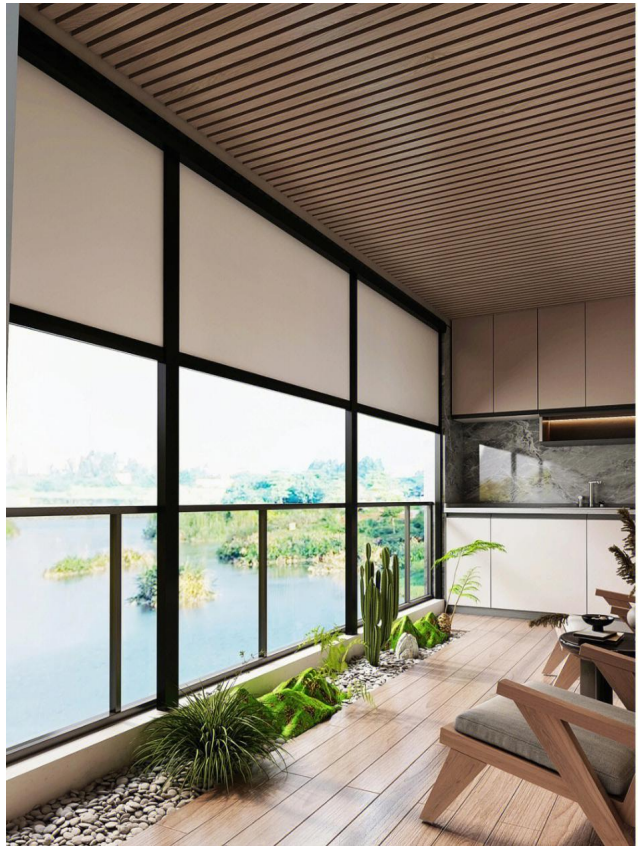





Private Space Creation

- Outdoor space is more and more attention by the rich class, township courtyard, senior club, want to create a can open open mode and private mode of space at any time, without destroying the original landscape design, windproof curtain multi-scene application function exactly can be realized, perfect to create private space.









Industrial/Commercial Facade Shading

- The excellent shading ability of windproof shutter and the convenience of electric intelligent remote control, as well as the durability of the material, make it equally suitable for family indoor window shading, and industrial parks, building facades, hotels, office buildings, glass curtain wall shading application.







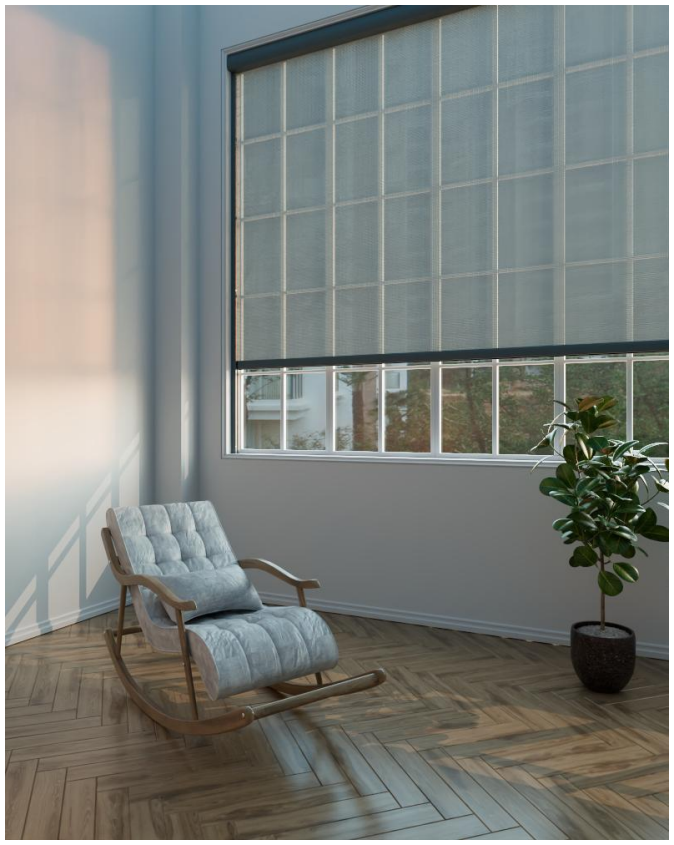

THANK YOU